te conectează la calitate
ELVON®

ELVON ELECTRIC S.R.L.
CUI RO28862189; Nr. Reg. Com.: J38/386/2011
Str. Râureni 266, Rm. Vâlcea, ROMÂNIA

Tel.: +40. 350 404 949;
E-mail: office@elvon.ro

IQNet
THE INTERNATIONAL CERTIFICATION NETWORK
ISO 9001:2015
Issued on: 2021-10-22
Registration Number: RO - 12423

ABS ENCLOSURES 600 × 400 × 200

(standards: IEC 60670-1, IEC 60670-24)

ELVON code	Product name	Cover material
54417	ABS enclosure with matte door, equipped with mounting plate (M) 600×400×200	ABS
54447	ABS enclosure with transparent door, equipped with mounting plate (M) 600×400×200	PC
54473	ABS enclosure with transparent door, equipped with blank plates 4×17 MCB 600×400×200	PC
54478	ABS enclosure with matte door, equipped with blank plates 4×17 MCB 600×400×200	ABS

GENERAL FEATURES

- Insulation voltage: 690 V AC
- Water/dust protection rating: IP65
- Impact resistance: IK10
- Body material: ABS
- Enclosure color: grey
- Door mounting: left-hand, opening up to 210°
- Mounting plate: galvanized steel
- Ambient temperature: –25°C < Ta < +60°C
- Maximum relative humidity at 20°C: 95%
- UV resistance: yes



ACCESSORIES

- Brass nuts for housing mounting
- Stainless steel springs for the window
- Gasket
- Stainless steel screws

SUPPLIED WITH: mounting plate, fixing lugs, self-tapping screws, two locks and one key

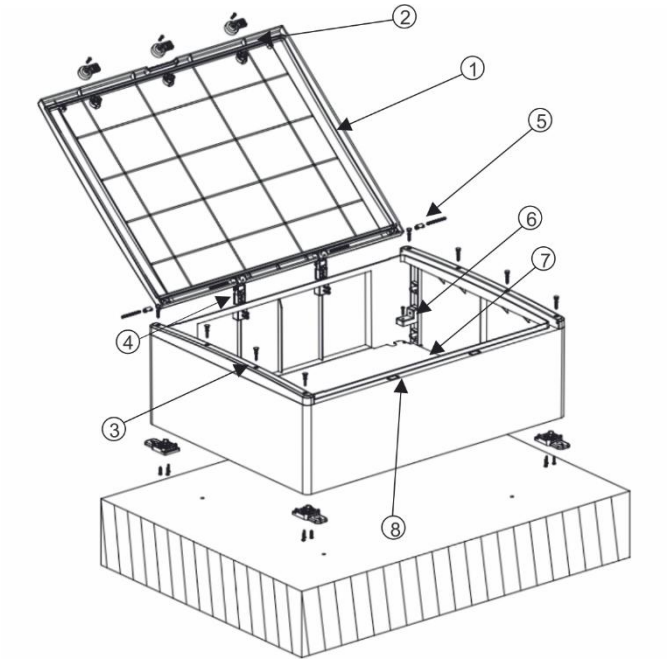

1. Sealing gasket
2. Lock the anchor and secure the screw bracket
3. Side-cast mounting with stop
4. Hinge mounting
5. Bushing with pins and pin mounting
6. Adjust the device support with plates to the desired height
7. Mounting plate
8. Plugging the opening used to change the cover opening direction

te conectează la calitate
ELVON®

ELVON ELECTRIC S.R.L.
CUI RO28862189; Nr. Reg. Com.: J38/386/2011
Str. Râureni 266, Rm. Vâlcea, ROMÂNIA

Tel.: +40. 350 404 949;
E-mail: office@elvon.ro

IQNet
THE INTERNATIONAL CERTIFICATION NETWORK
ISO 9001:2015
Issued on: 2021-10-22
Registration Number: RO - 12423

MOUNTING INSTRUCTIONS

- Their use is recommended in corrosive environments. Thanks to their construction quality, ABS enclosures are resistant in corrosive environments as well as in environments with extreme temperatures and humidity.
- They are used in a wide range of applications: electrical distribution boards, public lighting control equipment, telecommunications equipment, measuring and protection devices, equipment for railway networks, etc.
- The material is easy to cut; inspection windows for meters, surface-mounted industrial sockets, and windows for operating circuit breakers can be installed.

SIZES

ELVON code	Size A×B×C (mm)
54417	600 × 400 × 200
54447	600 × 400 × 200
54473	600 × 400 × 200
54478	600 × 400 × 200

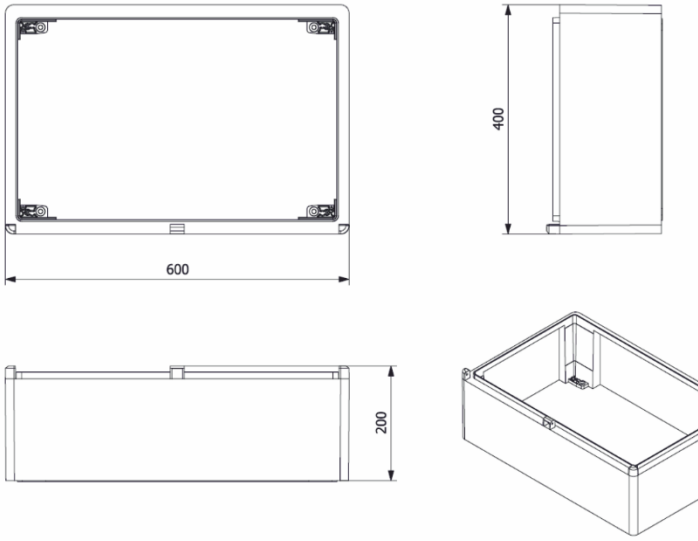

body size (mm)

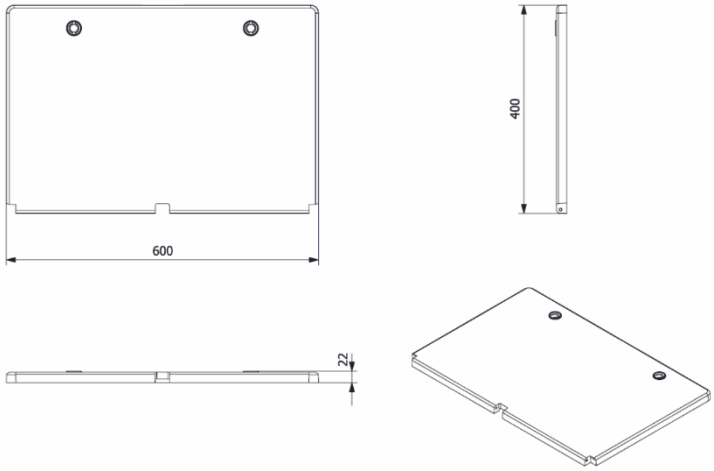

cover size (mm)